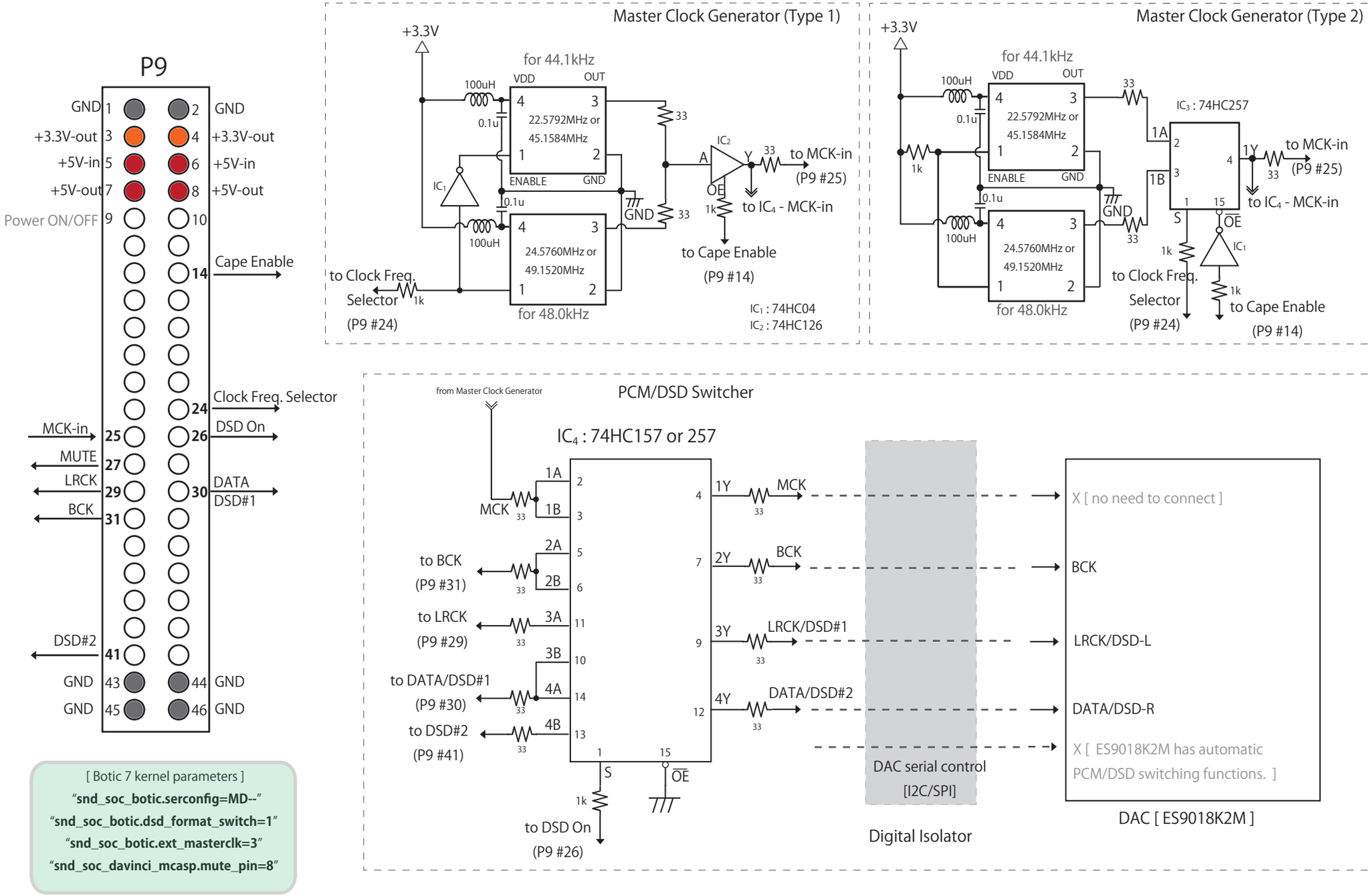

I2S/DSD Native Playback Add-on Bridge(Cape) for BeagleBone Black/Green with Botic 7 Kernel